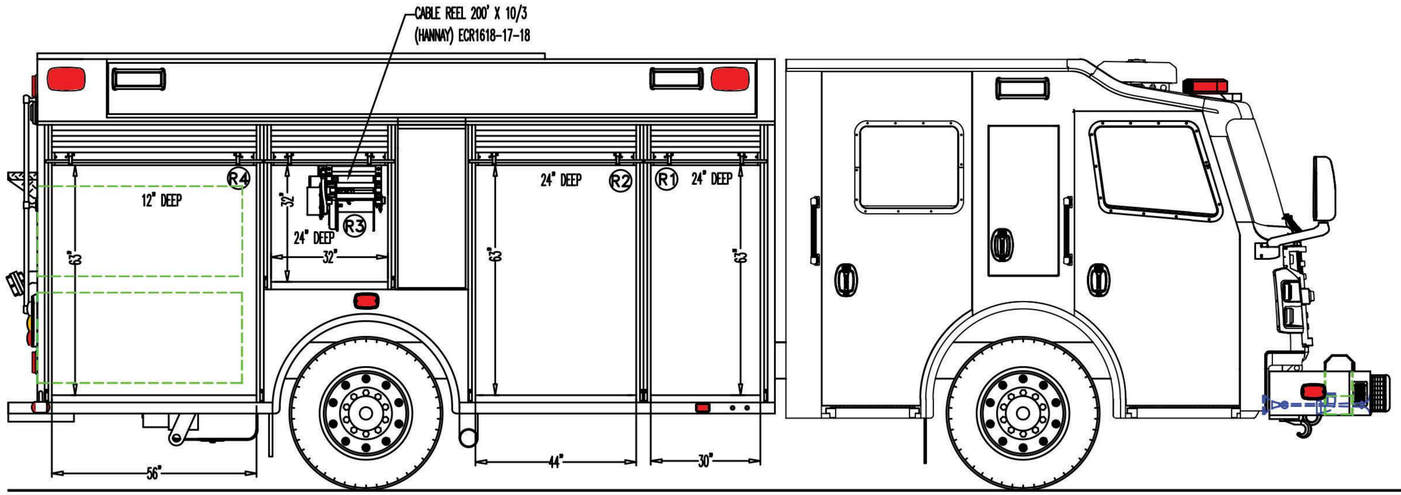

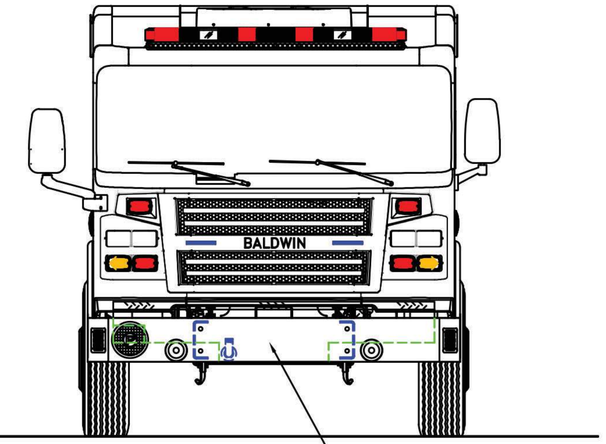

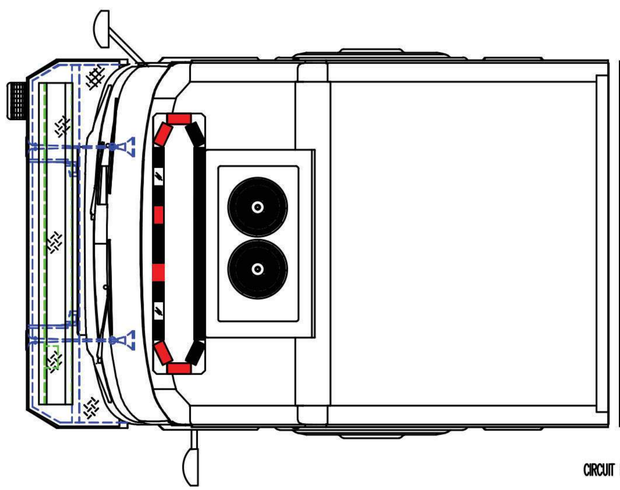

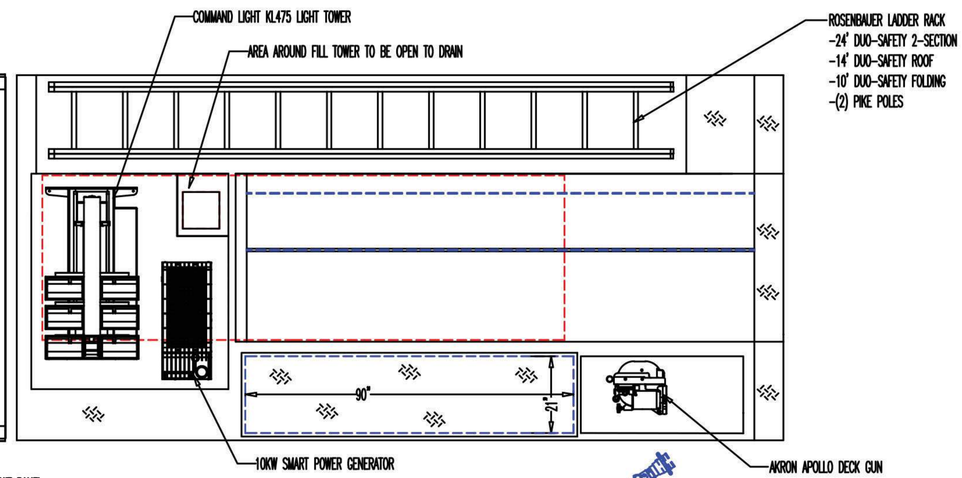

PUMPER

Rear Mount

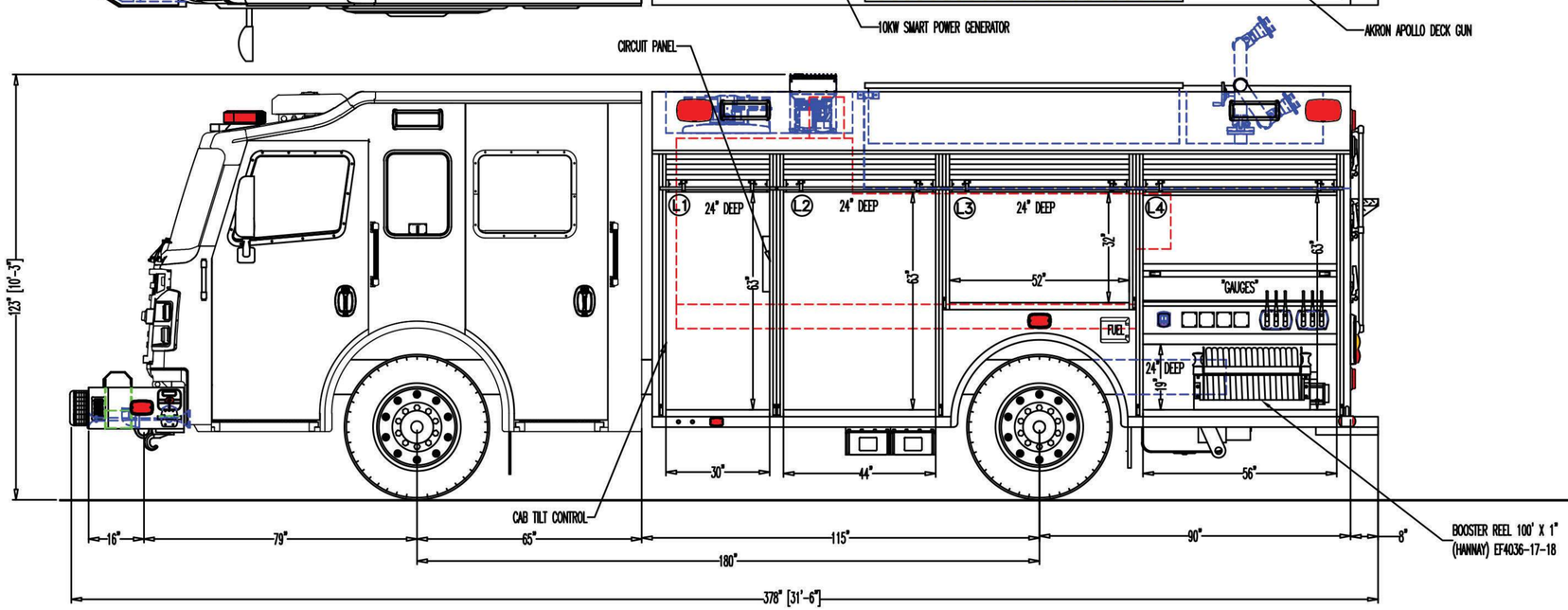

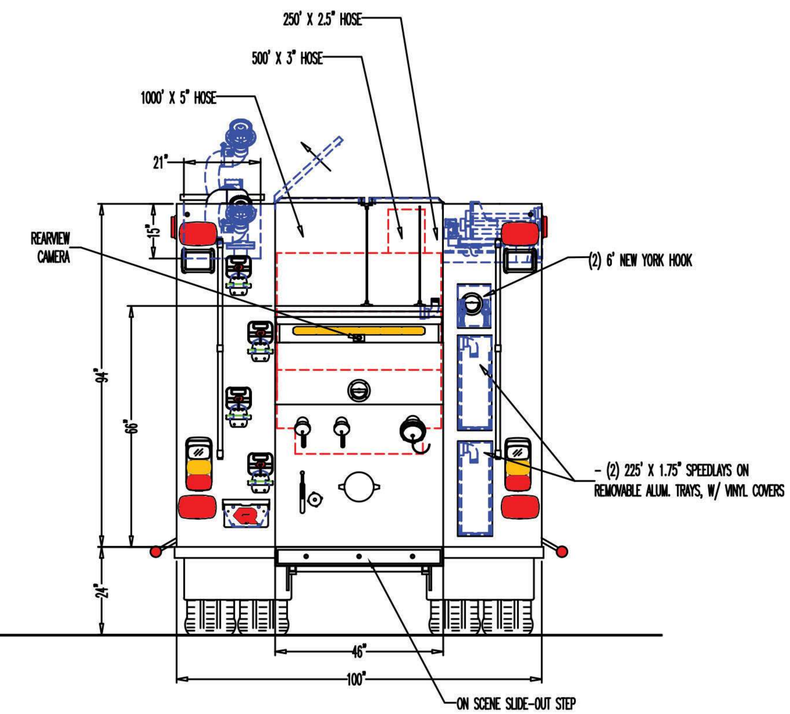

rosenbauer