rosenbauer

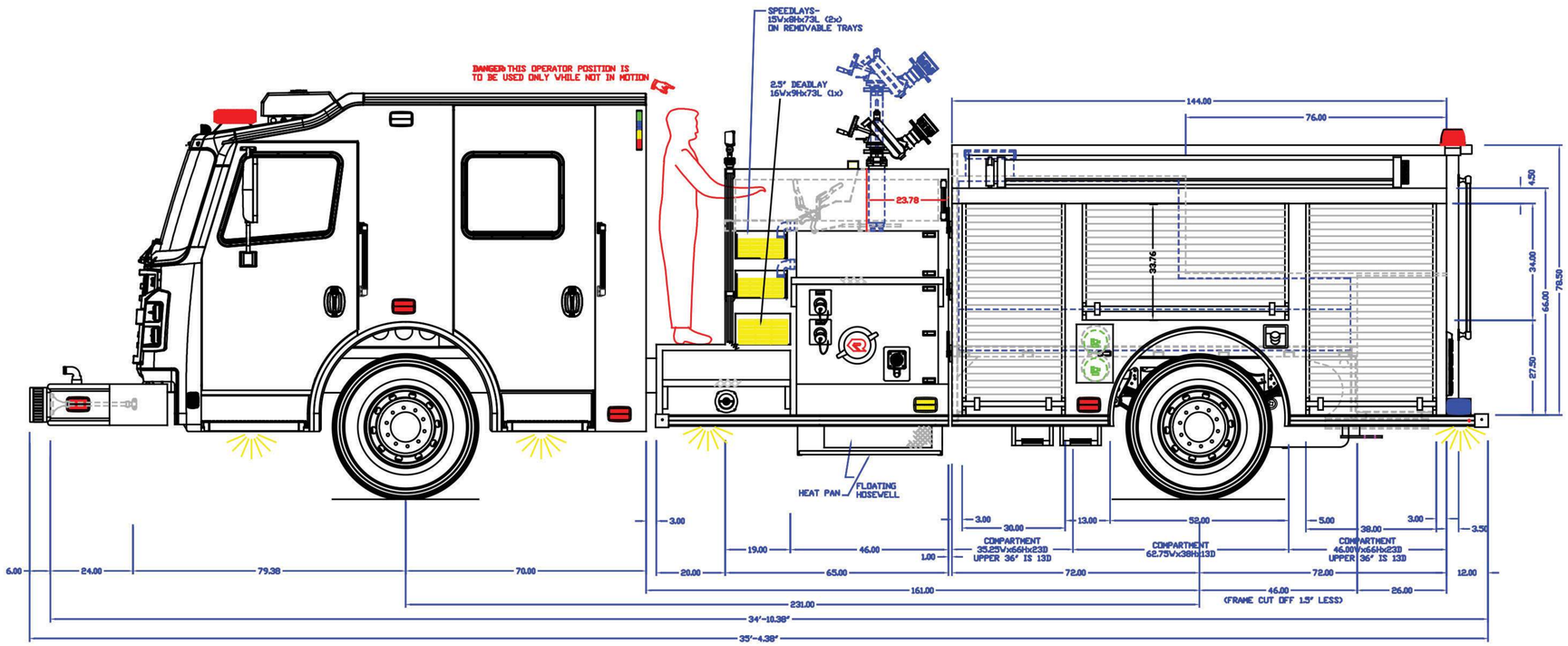

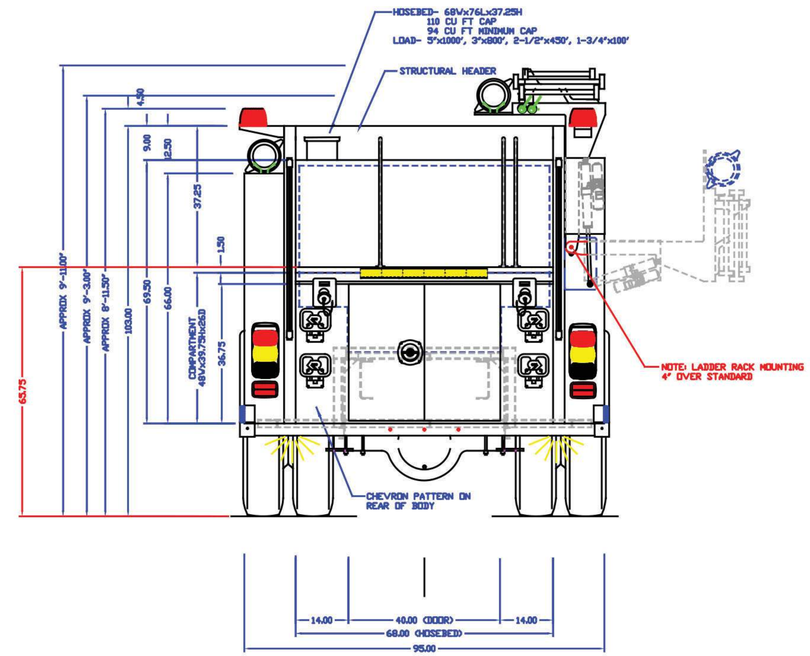

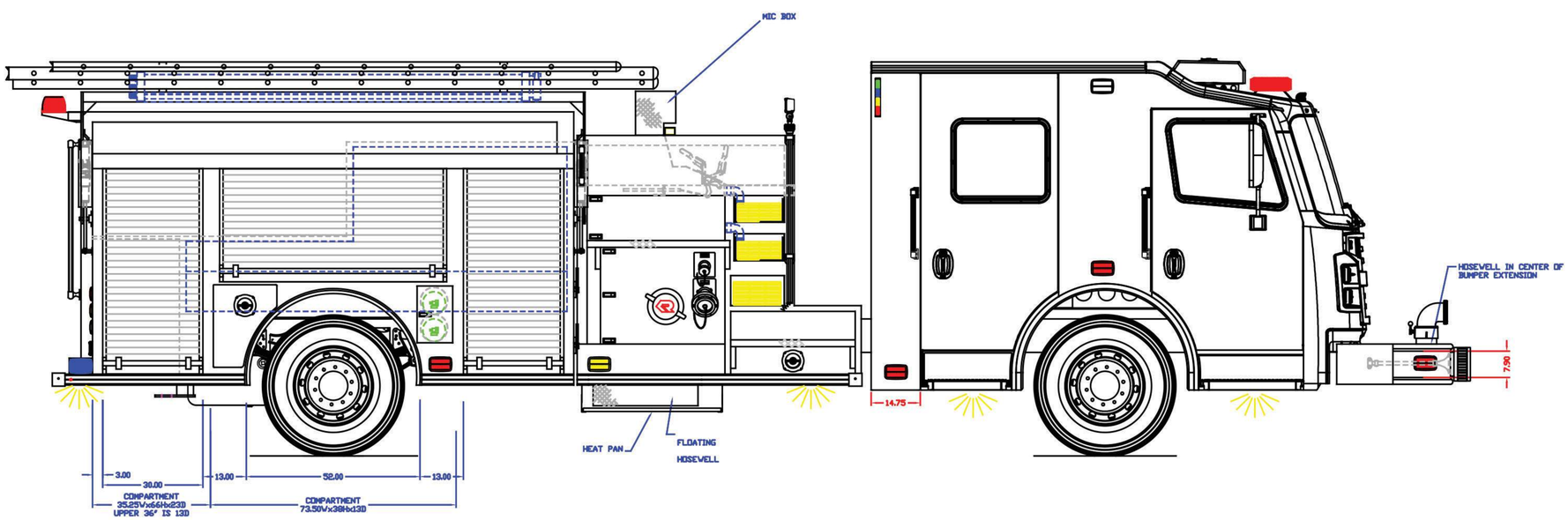

SENTINEL
EMERGENCY SOLUTIONS