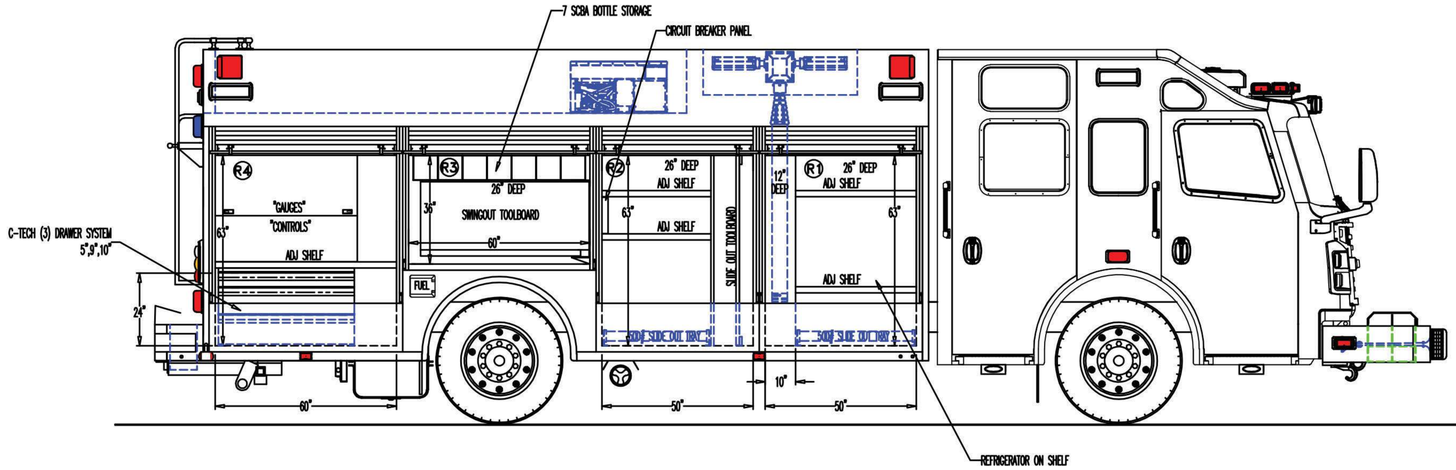
7 SCBA BOTTLE STORAGE
CIRCUIT BREAKER PANEL
C-TECH (3) DRAWER SYSTEM
5",9",10"
"GAUGES"
"CONTROLS"
ADJ SHELF
26" DEEP
SWINGOUT TOOLBOARD
26" DEEP
ADJ SHELF
SIDE OUT TOOLBOARD
12" DEEP
26" DEEP
ADJ SHELF
FUEL
REFRIGERATOR ON SHELF

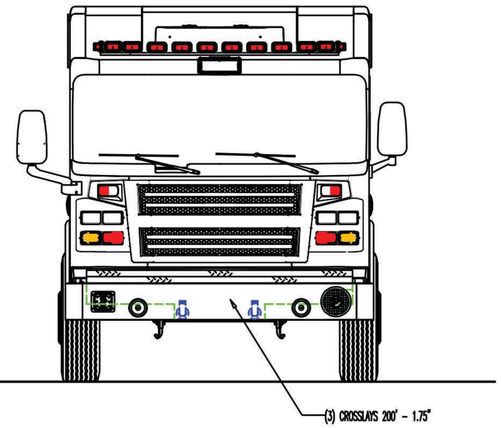
(3) GROSSLAYS 200' - 1.75"

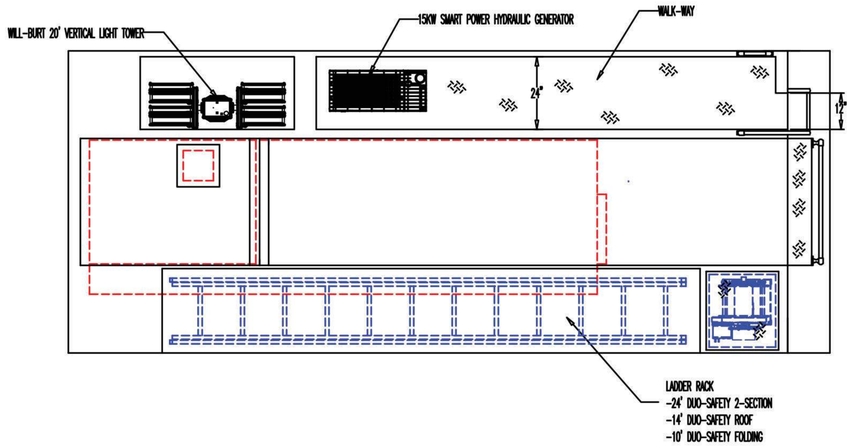
WILL-BURT 20' VERTICAL LIGHT TOWER
15KW SMART POWER HYDRAULIC GENERATOR
WALK-WAY
LADDER RACK
-24' DUO-SAFETY 2-SECTION
-14' DUO-SAFETY ROOF
-10' DUO-SAFETY FOLDING

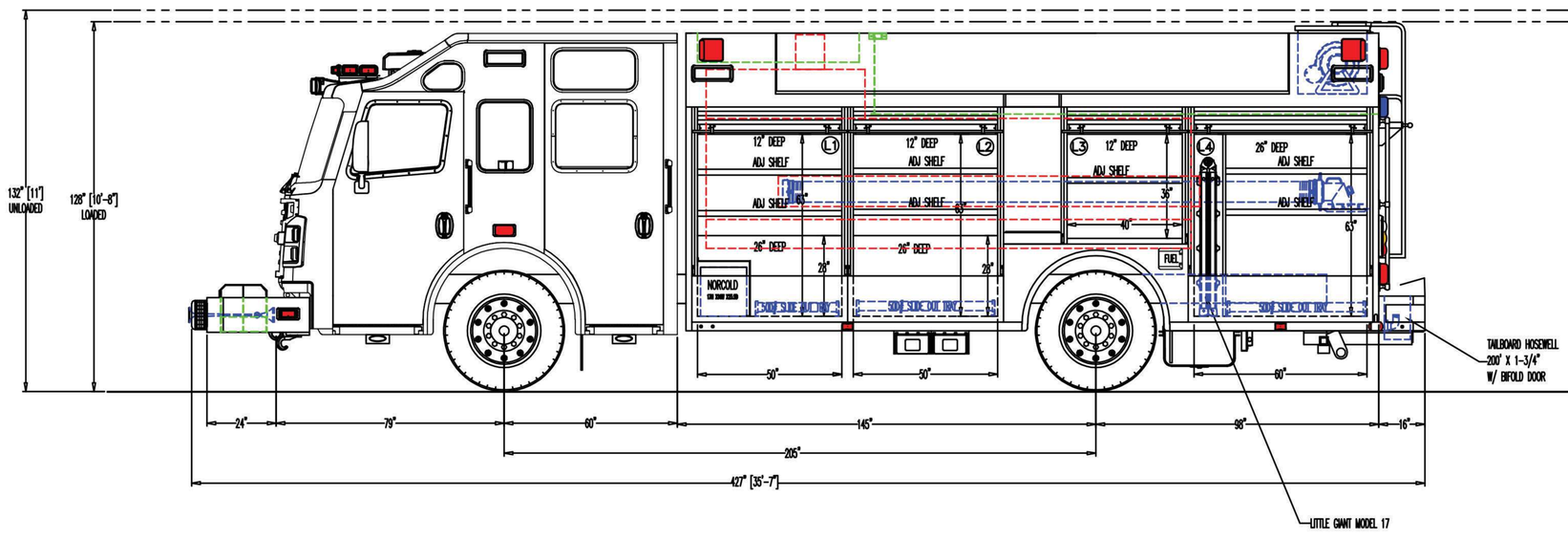
132" [11']
UNLOADED
128" [10'-8"]
LOADED
12" DEEP
ADJ SHELF
26" DEEP
NORCOLD
FUEL
TAILBOARD HOSEWELL
200' X 1-3/4"
W/ BIFOLD DOOR
LITTLE GIANT MODEL 17
427" [35'-7"]

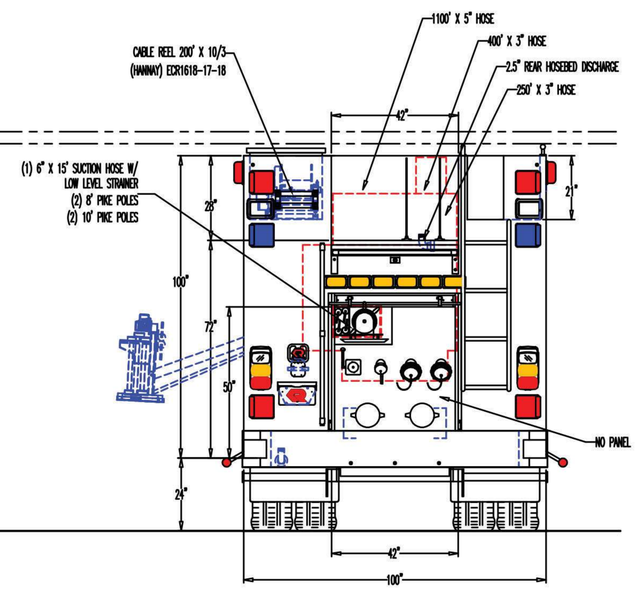
1100' X 5" HOSE
400' X 3" HOSE
2.5" REAR HOSEBED DISCHARGE
250' X 3" HOSE
CABLE REEL 200' X 10/3
(HANNAY) ECR1618-17-18
(1) 6" X 15' SUCTION HOSE W/
LOW LEVEL STRAINER
(2) 8' PIKE POLES
(2) 10' PIKE POLES
NO PANEL