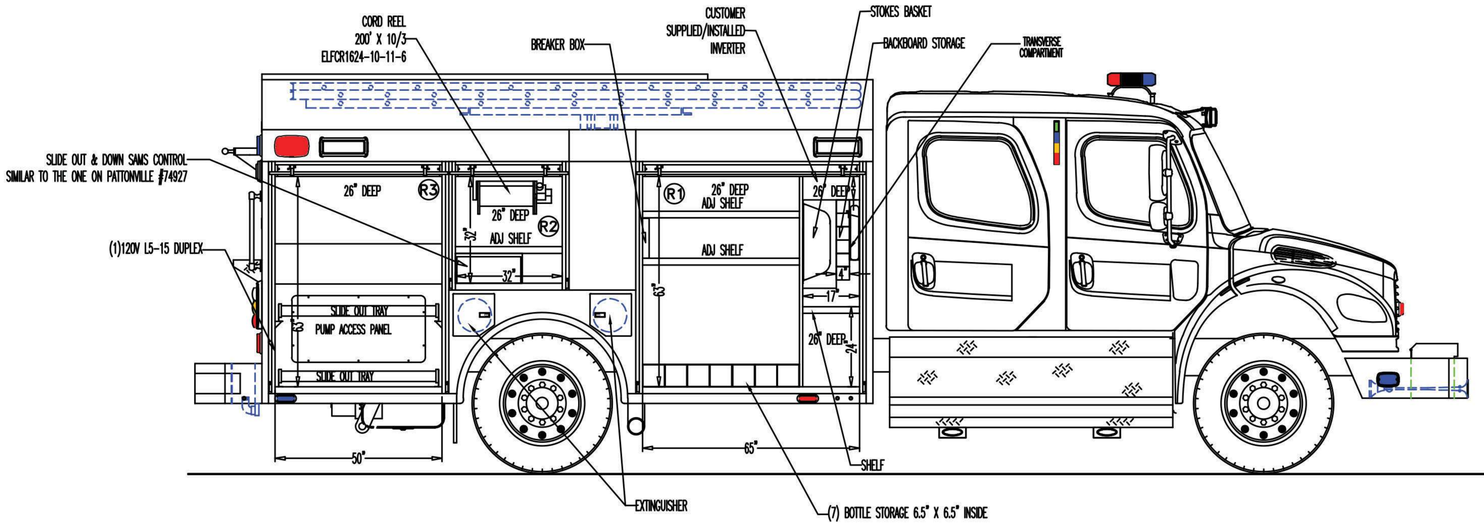
CORD REEL
200' X 10/3
ELFCR1624-10-11-6
BREAKER BOX
CUSTOMER
SUPPLIED/INSTALLED
INVERTER
STOKES BASKET
BACKBOARD STORAGE
TRANSVERSE
COMPARTMENT
SLIDE OUT & DOWN SAMS CONTROL
SIMILAR TO THE ONE ON PATTONVILLE #74927
(1)120V L5-15 DUPLEX
26" DEEP
R3
26" DEEP
R2
ADJ SHELF
32"
R1
26" DEEP
ADJ SHELF
26" DEEP
ADJ SHELF
63"
17"
4"
SLIDE OUT TRAY
PUMP ACCESS PANEL
SLIDE OUT TRAY
26" DEEP
24"
50"
65"
SHELF
EXTINGUISHER
(7) BOTTLE STORAGE 6.5" X 6.5" INSIDE

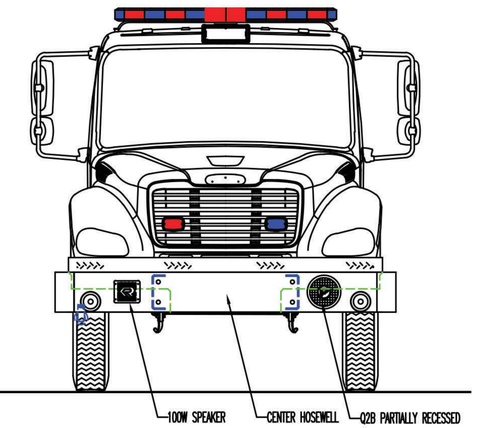
100W SPEAKER
CENTER HOSEWELL
Q2B PARTIALLY RECESSED

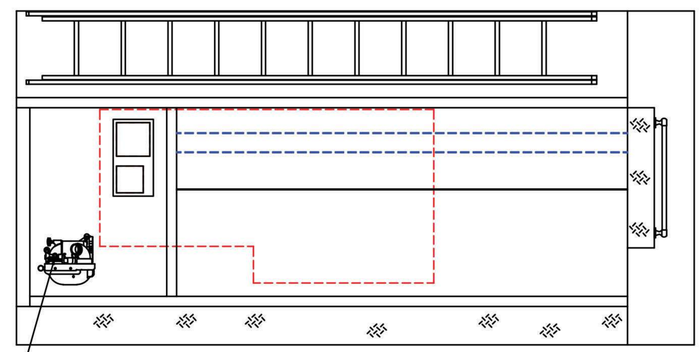
AKRON APOLLO HI-RISER DECK GUN

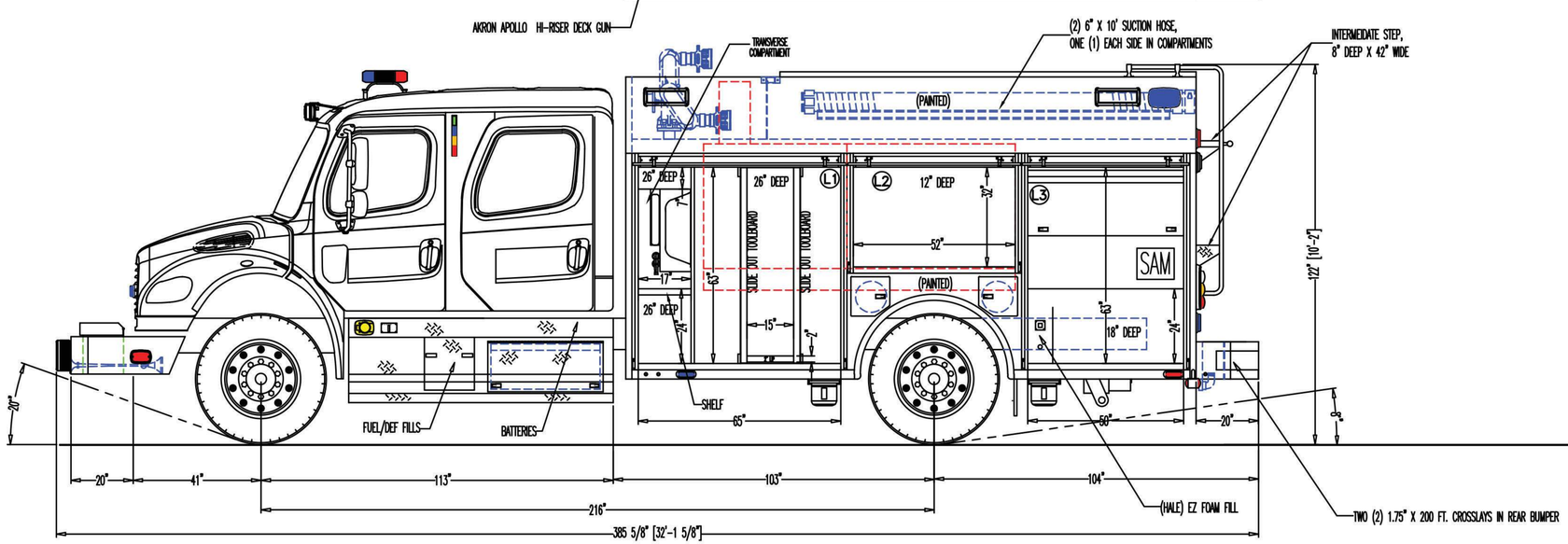
TRANSVERSE
COMPARTMENT
(2) 6" X 10' SUCTION HOSE,
ONE (1) EACH SIDE IN COMPARTMENTS
INTERMEDIATE STEP,
8" DEEP X 42" WIDE
(PAINTED)
26" DEEP
26" DEEP
L1
L2
12" DEEP
32"
L3
52"
SAM
SLIDE OUT TOOLBOARD
SLIDE OUT TOOLBOARD
63"
17"
15"
2"
(PAINTED)
18" DEEP
24"
26" DEEP
24"
122" [10'-2"]
8"
20°
SHELF
65"
50"
20"
FUEL/DEF FILLS
BATTERIES
20"
41"
113"
103"
104"
216"
385 5/8" [32'-1 5/8"]
(HALE) EZ FOAM FILL
TWO (2) 1.75" X 200 FT. CROSSLAYS IN REAR BUMPER

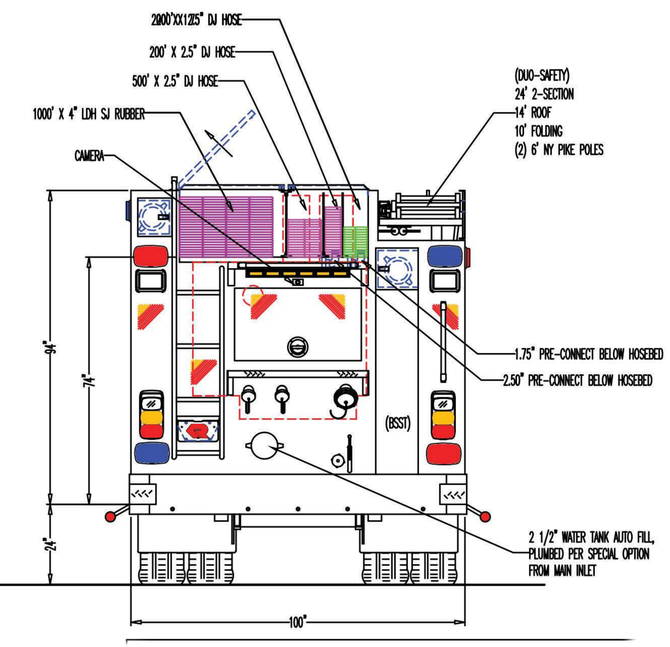
2@00'X1225" DJ HOSE
200' X 2.5" DJ HOSE
500' X 2.5" DJ HOSE
1000' X 4" LDH SJ RUBBER
CAMERA
(DUO-SAFETY)
24' 2-SECTION
14' ROOF
10' FOLDING
(2) 6' NY PIKE POLES
1.75" PRE-CONNECT BELOW HOSEBED
2.50" PRE-CONNECT BELOW HOSEBED
(BGST)
94"
74"
24"
2 1/2" WATER TANK AUTO FILL,
PLUMBED PER SPECIAL OPTION
FROM MAIN INLET
100"