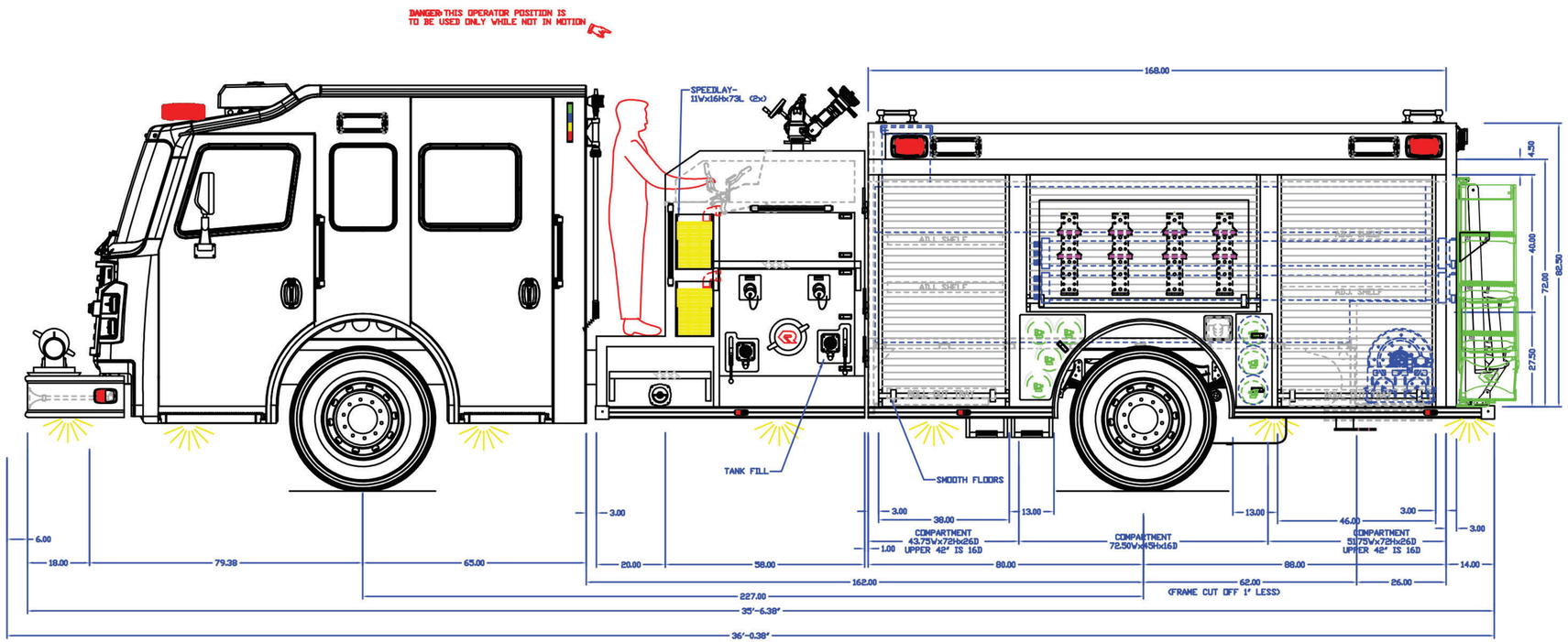

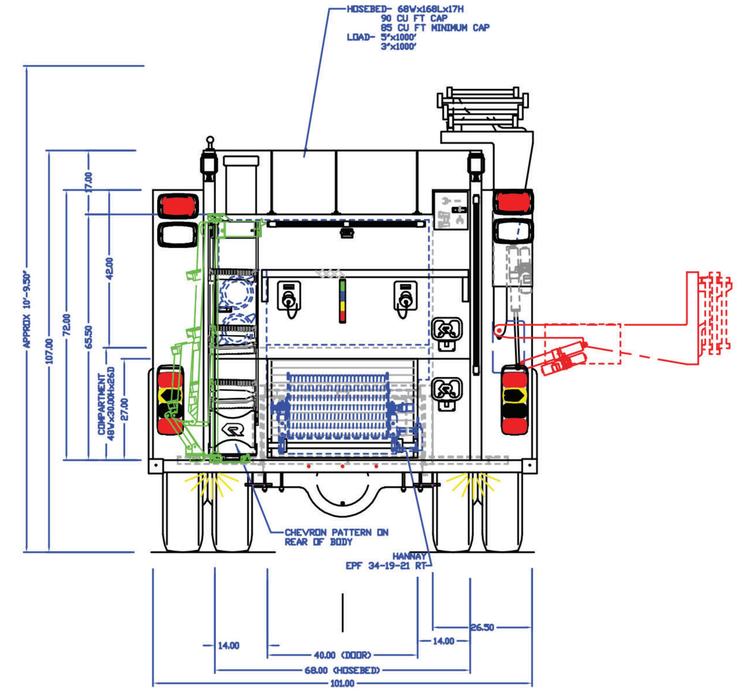

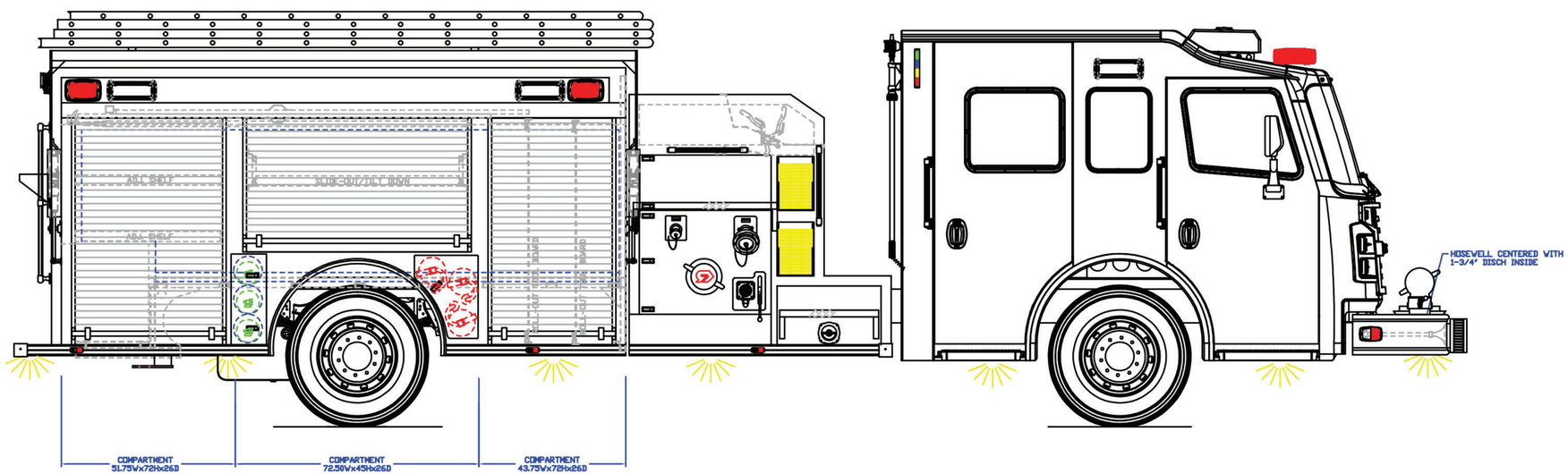

rosenbauer

SENTINEL
EMERGENCY SOLUTIONS