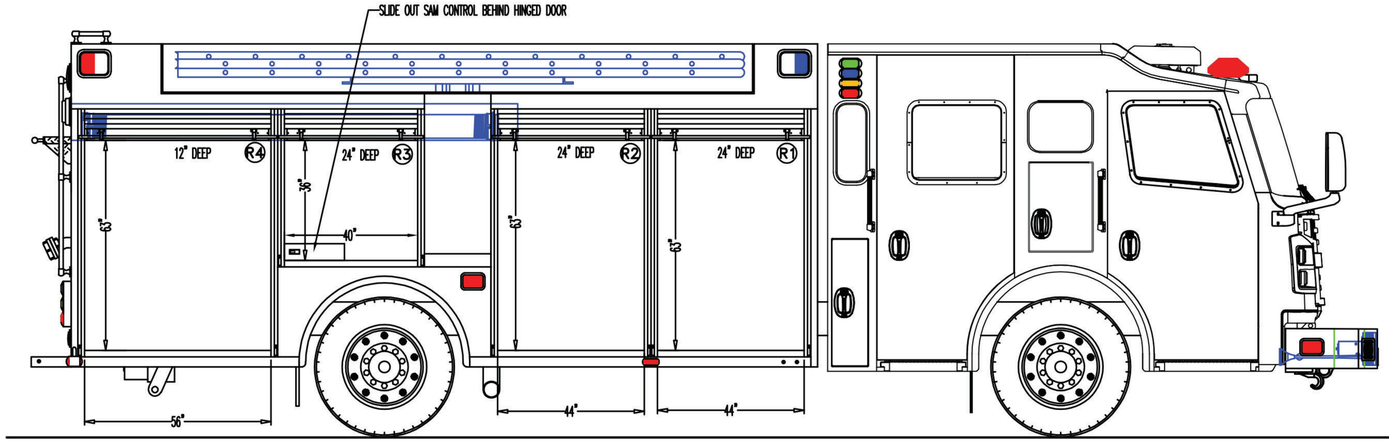
SLIDE OUT SAW CONTROL BEHIND HINGED DOOR
12" DEEP
24" DEEP
24" DEEP
24" DEEP
R4
R3
R2
R1
36"
40"
63"
63"
63"
56"
44"
44"

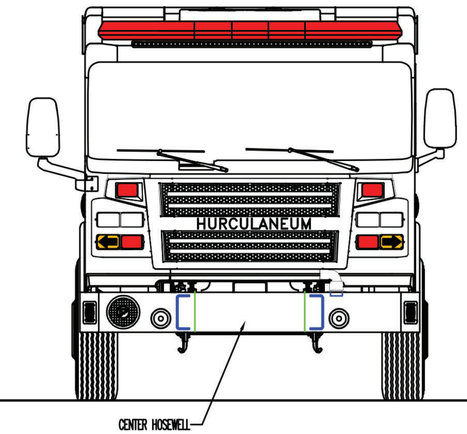
HURCULANEUM
CENTER HOSEWELL

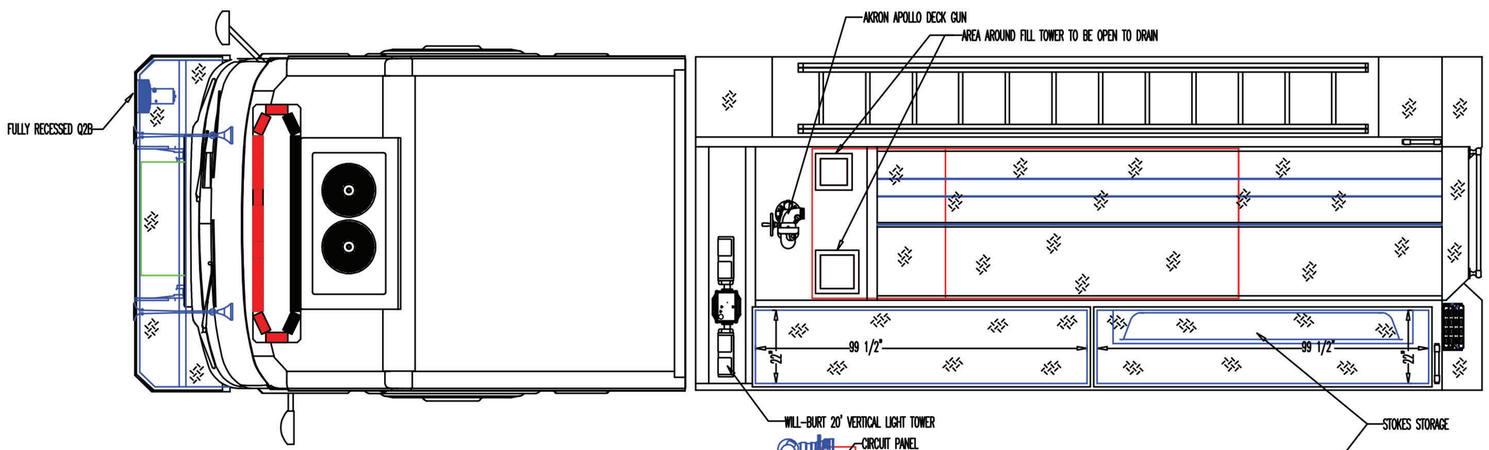
FULLY RECESSED Q2B
AKRON APOLLO DECK GUN
AREA AROUND FILL TOWER TO BE OPEN TO DRAIN
99 1/2"
99 1/2"
22"
22"
WILL-BURT 20' VERTICAL LIGHT TOWER
CIRCUIT PANEL
STOKES STORAGE

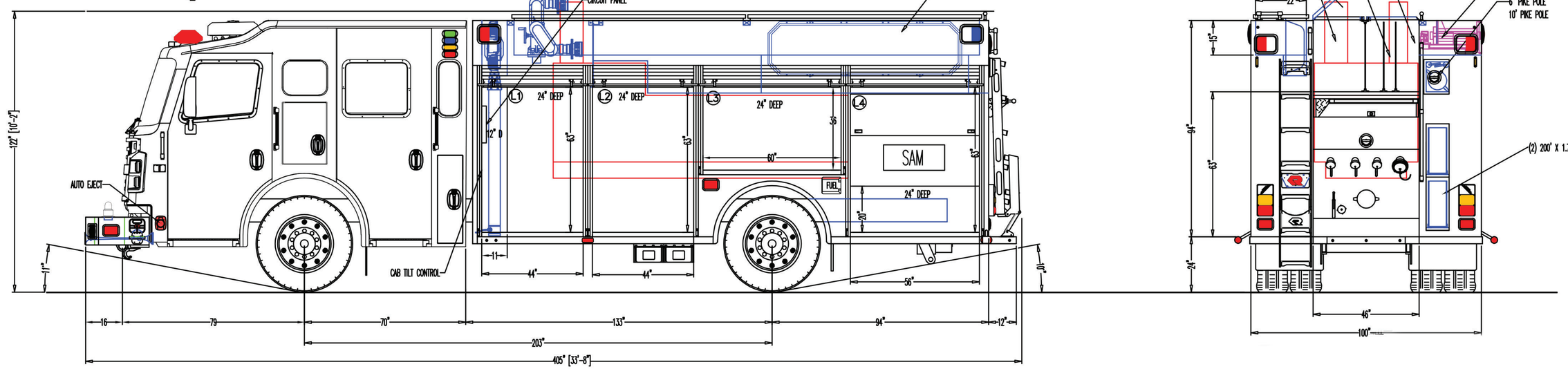
122" [10'-2"]
AUTO EJECT
CAB TILT CONTROL
L1
L2
L3
L4
24" DEEP
24" DEEP
24" DEEP
24" DEEP
12"
63"
63"
36
60"
63"
SAM
FUEL
20"
11"
44"
44"
56"
10"
16
79
70"
133"
94"
12"
203"
405" [33'-8"]

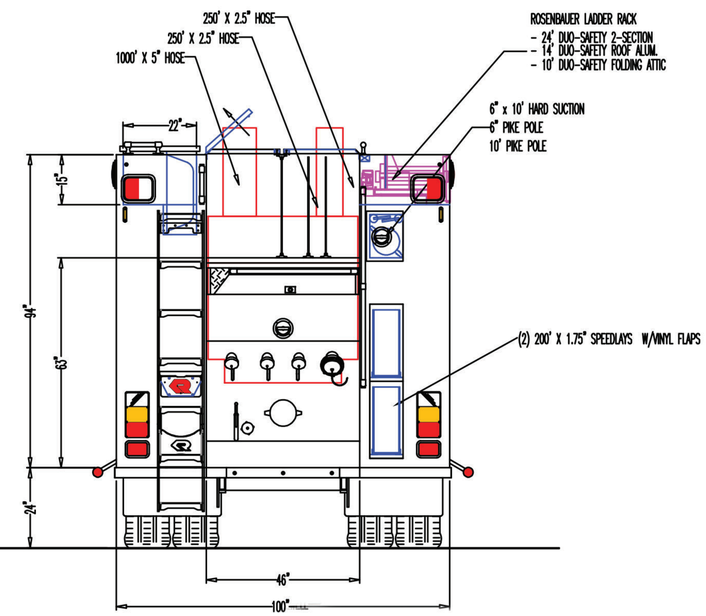
250' X 2.5" HOSE
250' X 2.5" HOSE
1000' X 5" HOSE
ROSENBAUER LADDER RACK
- 24' DUO-SAFETY 2-SECTION
- 14' DUO-SAFETY ROOF ALUM.
- 10' DUO-SAFETY FOLDING ATTIC
6" x 10' HARD SUCTION
6" PIKE POLE
10' PIKE POLE
(2) 200' X 1.75" SPEEDLAYS W/VINYL FLAPS
22"
15"
94"
63"
24"
46"
100"