SENTINEL
EMERGENCY SOLUTIONS
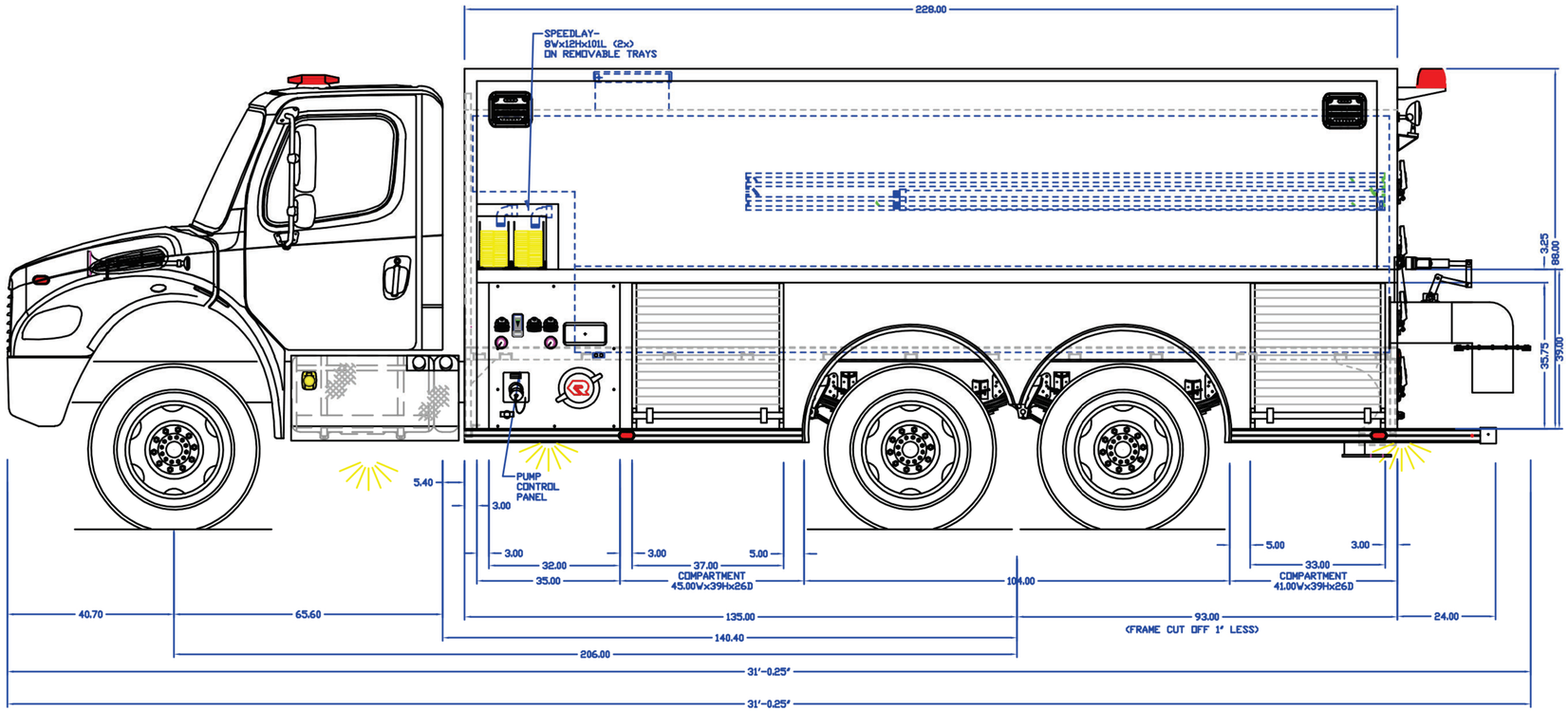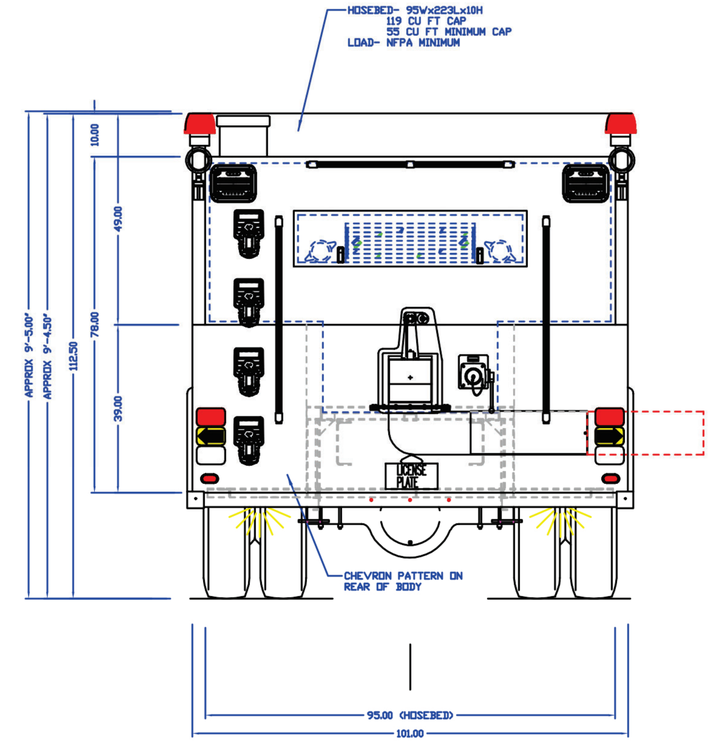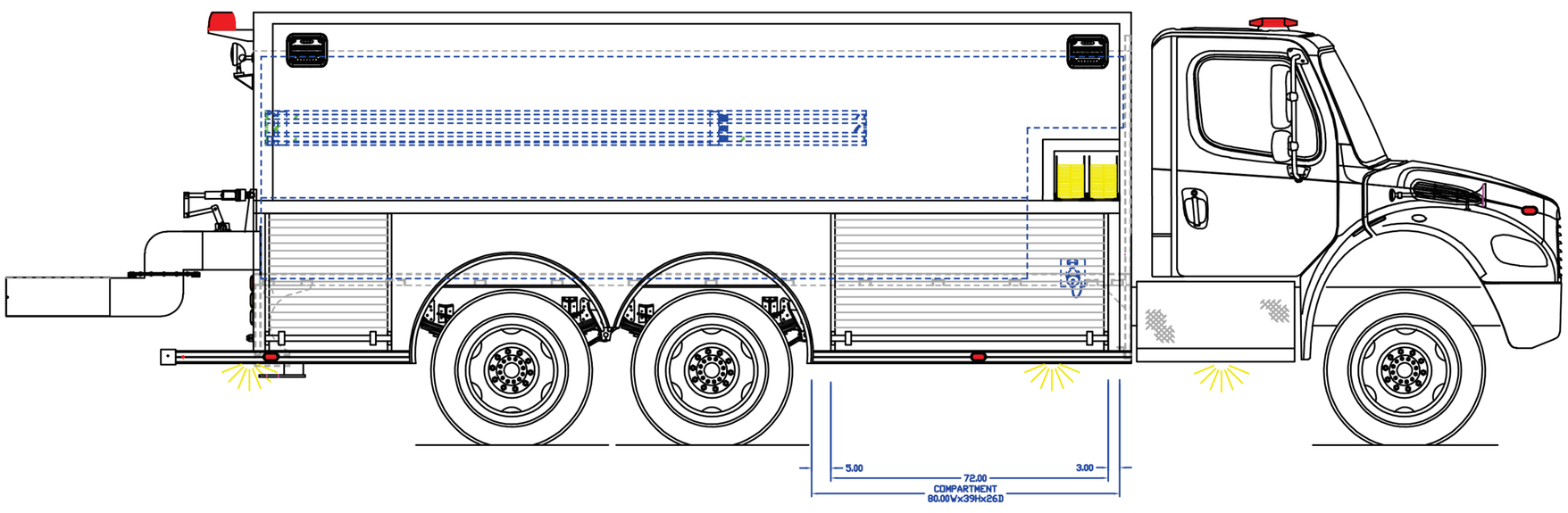
rosenbauer