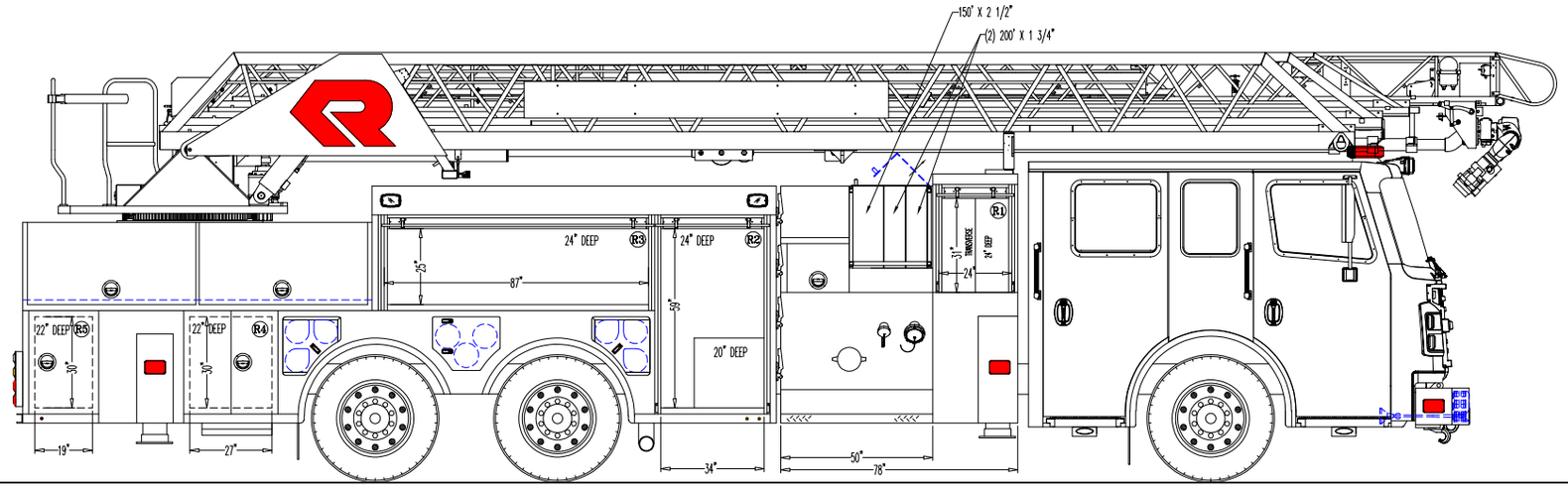

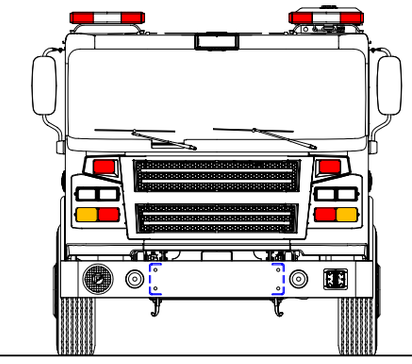

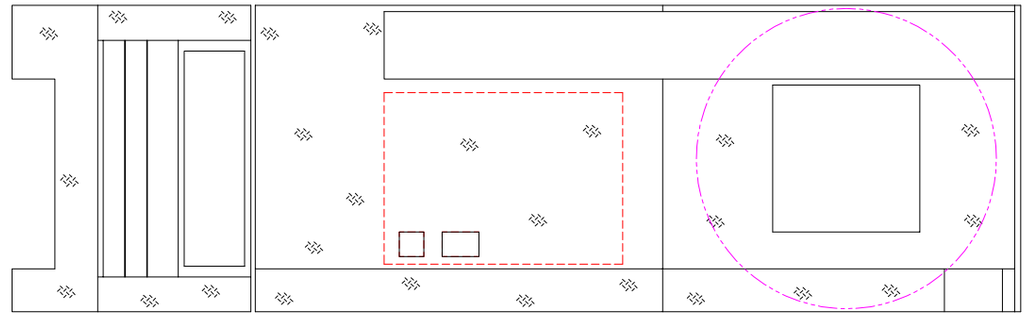

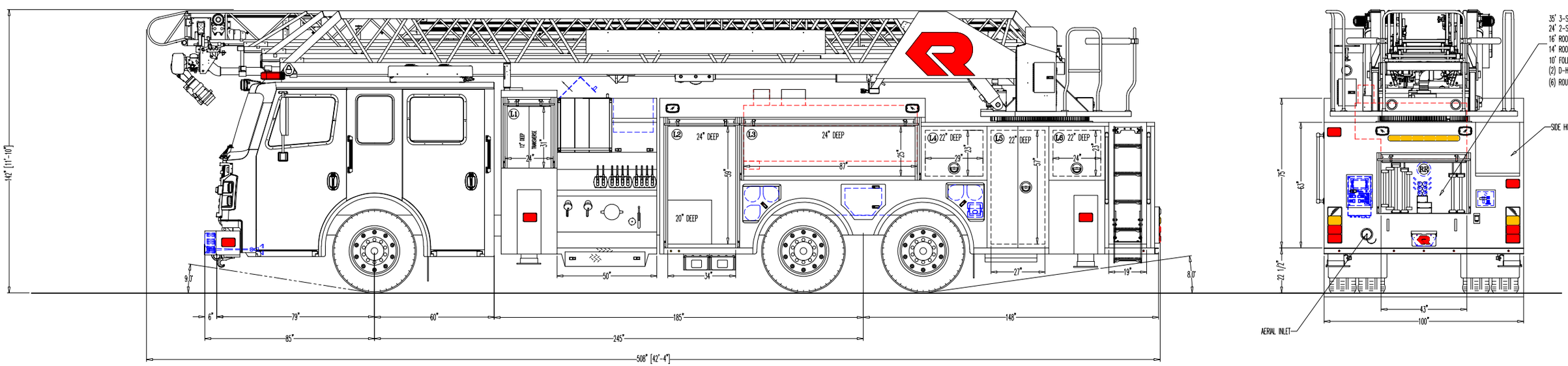

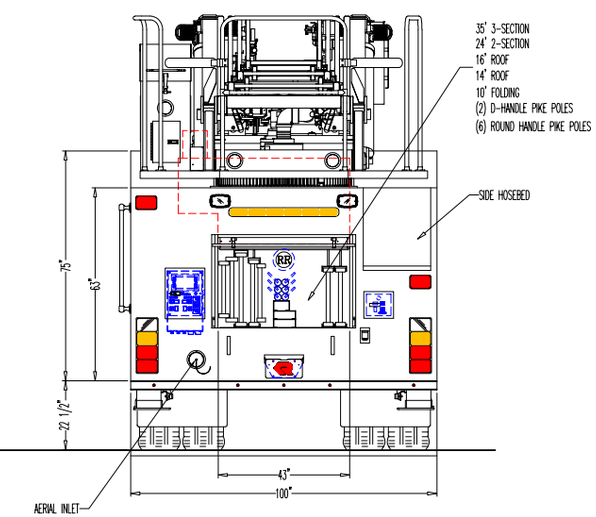

rosenbauer

SENTINEL
EMERGENCY SOLUTIONS